PENGUIN™ SOLUTIONS

Penguin Edge™ IFC6601

Micro SoM based on the Qualcomm® Snapdragon™ 820 Processor

- Qualcomm Snapdragon 820 processor (APQ8096 SoC)
  - Quad-core ARM v8 64-bit CPUs organized as two dual clusters viz., Gold @ 2.2GHz and Silver @ 1.6GHz each
  - Adreno 530 GPU with 64-bit addressing and support for OpenGL ES 3.2, OpenCL 2.0, and Vulcan
  - Hexagon 680 DSP with dual-Hexagon vector processor (HVX-512) @ 825MHz for ultra low-power audio and computer vision processing
  - Dual 14-bit Spectra ISP with support for up to 1.2GPix/sec throughput with zero shutter lag
- On-board LPDDR4 RAM, UFS flash memory, WiFi/BT, audio codec, power management and GPS
- Complete 4K encode/decode system - 4k60 H.265/VP9 decode with uncompressed 4K display

4K UHD HEVC video and HDMI 2.0 capable SoM for SWaP constrained embedded applications

The Penguin Edge™ IFC6601 Micro SoM, powered by the next-gen ARM v8 64-bit quad-core Qualcomm Snapdragon 820 applications processor (APQ8096), is suitable for several advanced embedded applications. The IFC6601 Micro SoM provides pin, electrical, connector, and form-factor compatibility across a wide product line of Micro SoMs that share a common carrier board design. The IFC6601 Micro SoM also comes with an optional EMI shielding for better RF noise protection, while also doubling up as a medium for heat spreading and dissipation to improve performance.

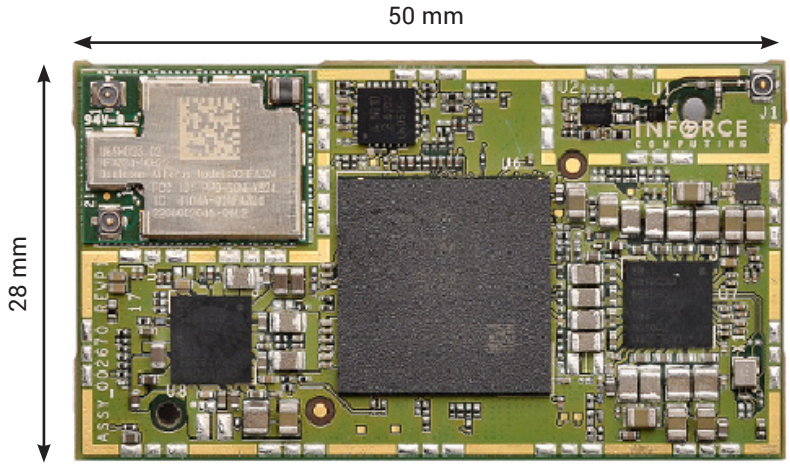

Industrial IoT | Robotics | Digital Signage | Medical Imaging | Drones | Wearable

Qualcomm

PENGUIN™ EDGE

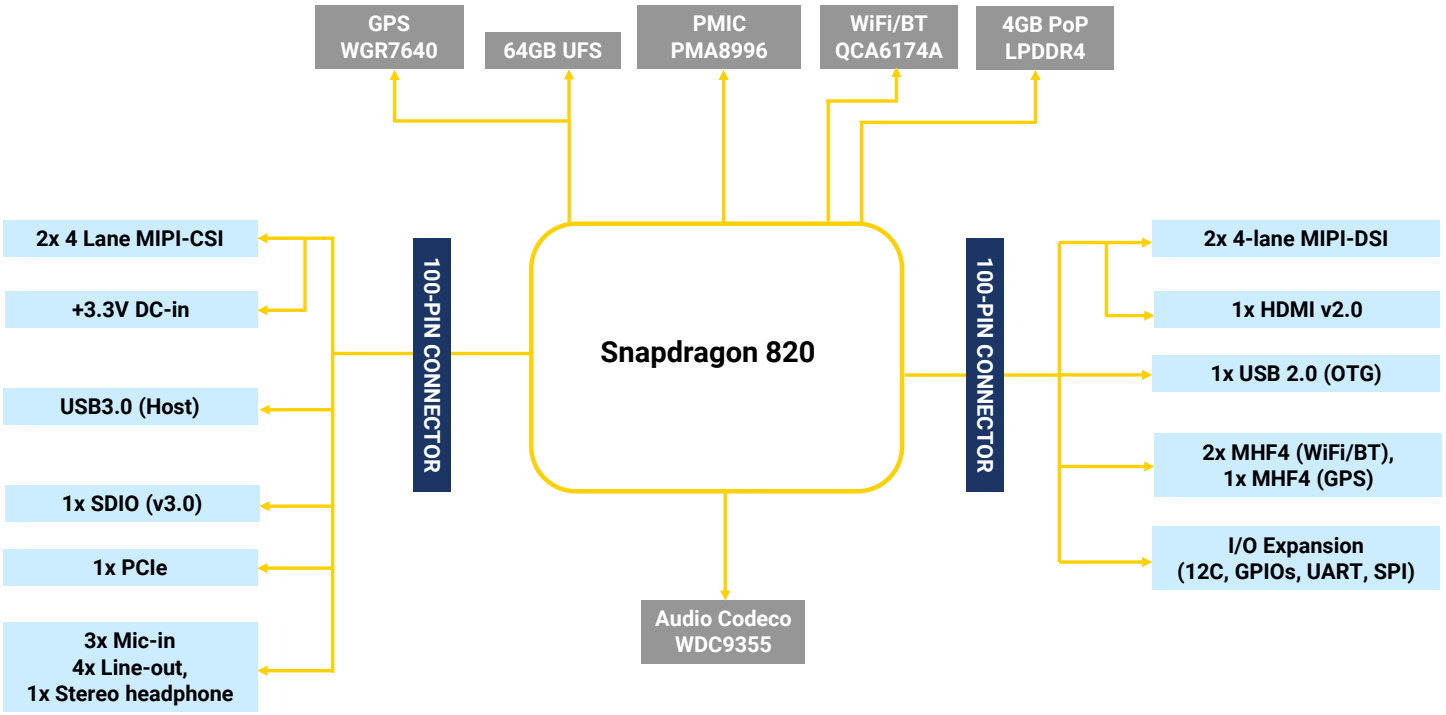

Storage, Multimedia, and Connectivity

- 4GB LPDDR4
- 64GB UFS 2.0 gear 3 (1 lane)
- eMMC 5.1 (optional)
- 1x µSD card SD3.0 interface with support up to HS400
- H.264 playback @ 4K60 and capture @ 4K30
- H.265 playback @ 4K60 and capture @ 4K30
- Hi-Fi Audio with codec support for MP3, AAC + eAAC, WMA 9/ Pro, Dolby AC-3, eAC-3, DTS
- Dual 4-lane DSI DPHY 1.2 and HDMI 2.0 interfaces for touch screen displays
- Supports the capture of up to 28 megapixels with zero shutter lag on MIPI-CSI
- BT4.2 LE and dual band WLAN 2x2 MU-MIMO

Flexible and Configurable I/O Interfaces

- HDMI V2.0
- Dual MIPI-DSI (4-lane) with touch
- 2x 4-lane MIPI-CSI
- 1xUSB 3.0; 1x USB 2.0 (Host/Device/OTG)
- 12x BLSPs for GPIO/UART/I2C/SPI
- 4x Lineout; 1x Headphone; 3x Mic-in; 1x SlimBUS
- 1x PCIe; 1x SDC
- GPS 1x MHF4
- GbE (on carrier)

Software

- Android Nougat 7.1.1/Android Oreo 8.1 BSP
- Debian Jessie (or higher) Linux BSP

Power, Mechanical, and Environmental

- **SoM Power:** +3.3V/6A Input
- **Operating Temp**: 0°C to 50°C
- **Storage Temp**: -20°C to 80°C
- **Dimensions:** 28mm x 50mm
- **Weight:** 11 grams/0.4 oz
- **Relative Humidity**: 5 to 95% non-condensing
- **Compliance:** RoHS and WEEE

Carrier Board for Penguin Edge™ IFC6601 Micro SoM

A mini-ITX carrier board (170 X170mm) expands the I/O and connectivity of the IFC6601 Micro SoM. A full-fledged development platform (Penguin Edge IFC6601 Micro SoM Development Kit) inclusive of both is available.

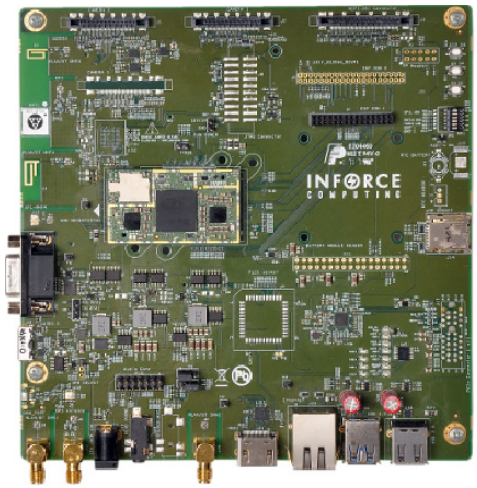

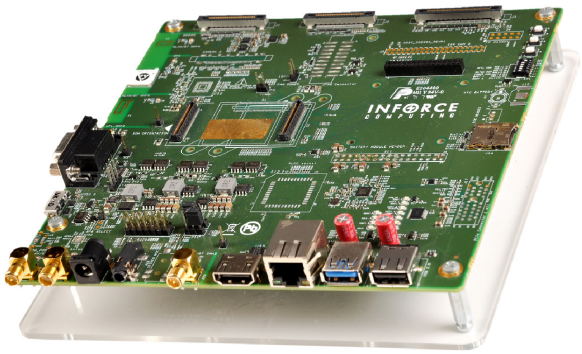

**Not all interfaces can be used at the same time*

Ordering Information	
Part Number	**Description**
IFC6601-00-P3	Micro SOM (Android)
IFC6601-10-P3	Micro SOM (Linux)
SYS6601-05-P3	Mini-ITX Dev. Kit (Android)
SYS6601-15-P3	Mini-ITX Dev. Kit (Linux)

Contact Us

+1 602-438-5720
info@penguinsolutions.com
www.penguinsolutions.com/edge/

About Penguin Solutions

Penguin Solutions accelerates customers' digital transformation with the power of emerging technologies in HPC, AI, and IoT with solutions and services that span the continuum of edge, core, and cloud. The company designs highly advanced infrastructure, machines and networked systems that enable the world's most innovative enterprises and government institutions to build the autonomous future, drive discovery and amplify human potential. The Penguin Edge portfolio covers system on modules, single board computers and application-ready platforms that extend insight, intelligence, and analytical capabilities closer to where the data is generated - optimizing a range of use cases across industries and rugged environments.

PENGUIN™ SOLUTIONS

Penguin Solutions is a trade name used by SMART Wireless Computing, Inc., a wholly owned subsidiary of SMART Global Holdings, Inc. Penguin Edge is a trademark owned by Penguin Computing, Inc., a wholly owned subsidiary of SMART Global Holdings, Inc. Qualcomm and Snapdragon are trademarks of Qualcomm Incorporated, registered in the United States and other countries. All other logos, trade names, and trademarks are the property of their respective owners. Specifications are subject to change without notice. For full legal terms and conditions, please visit www.penguinsolutions.com/edge/legal/.

©2022 SMART Wireless Computing, Inc.